PARTS CATALOG

Additional Finisher Tray-A1

Canon

Nov 13 2003

PREFACE

This Parts Catalog contains listings of parts used

Diagrams are provided with the listings to aid the service technician in identifying clearly, the item to be orderd.
Whenever ordering parts, consult this Parts Catalog for all of the information pertaining to each item. Be sure to include, in the Parts Request, the full item description, the item part number, and the quantity.

COPYRIGHT (C) 1999 CANON INC.

Use of this manual should be strictly supervised to avoid disclosure of confidential information.

Contents

Parts List Index

Additional Finisher Tray-A1 1-1

Additional Finisher Tray-A1

Q17 OPTION TRAY ASSEMBLY 2-1

NUMERICAL INDEX

Additional Finisher Tray-A1

PARTS NUMBER	FIGURE & KEY NO.	PARTS NUMBER	FIGURE & KEY NO.	PARTS NUMBER	FIGURE & KEY NO
FC5-6977-000	Q17 - 12				
FC5-6979-000	Q17 - 13				
FC5-6981-000	Q17 - 1				
FC5-6982-000	Q17 - 2				
FC5-6983-000	Q17 - 3				
FC5-6984-000	Q17 - 4				
FC5-6985-000	Q17 - 5				
FC5-6986-000	Q17 - 6				
FC5-6987-000	Q17 - 7				
FC5-6988-000	Q17 - 8				
FC5-6990-000	Q17 - 14				
FC5-6991-000	Q17 - 11				
FC5-6992-000	Q17 - 9				
FG3-2899-000	Q17 - 17				
NPN	Q17 -				
WG8-5593-000	Q17 - 15				
XA9-1031-000	Q17 - 16				
XA9-1386-000	Q17 - 10				
XB4-5401-205	Q17 - 501				

Additional Finisher Tray-A1

F26-2705-000JLE00001-

Contents

Q17 OPTION TRAY ASSEMBLY 2-1

FIGURE Q17
OPTION TRAY ASSEMBLY

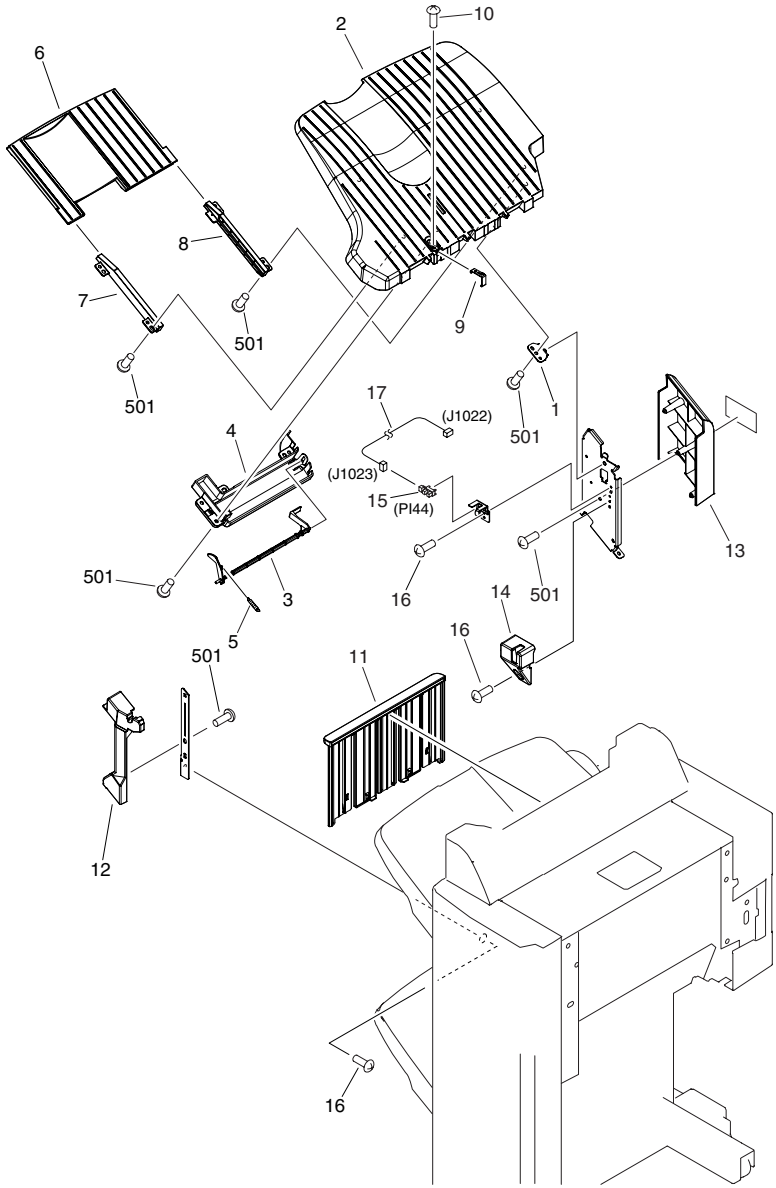

FIGURE & KEY NO.	PARTS NUMBER	RANK	Q'TY	DESCRIPTION	SERIAL NUMBER/ REMARKS	SVC
Fig.Q17	NPN		RF	OPTION TRAY ASSEMBLY		
1	FC5-6981-000		1	HOLDER, OPTION TRAY		
2	FC5-6982-000		1	TRAY, OPTION		
3	FC5-6983-000		1	COVER, OPTION, LOWER		
4	FC5-6984-000		1	ARM, OPTION SENSOR		
5	FC5-6985-000		1	SPRING, TENSION		
6	FC5-6986-000		1	TRAY, OPTION EXTENSION		
7	FC5-6987-000		1	GUIDE, OP. EXTENSION TRAY, F.		
8	FC5-6988-000		1	GUIDE, OP. EXTENSION TRAY, R.		
9	FC5-6992-000		1	PLATE, OPTION TRAY SENSING		
10	XA9-1386-000		1	SCREW,RS,M3X8		
11	FC5-6991-000		1	PANEL, OPTION SLIDE		
12	FC5-6977-000		1	COVER, OPTION TRAY, FRONT		
13	FC5-6979-000		1	COVER, OPTION TRAY, REAR		
14	FC5-6990-000		1	COVER, OPTION SENSOR		
15	WG8-5593-000		1	PHOTO INTERRUPTER TLP1242	PI44, J1023	
16	XA9-1031-000		5	SCREW,MACH.,TRUSS HEAD,M4X8		
17	FG3-2899-000		1	CABLE, OPTION TRAY	J1022,1023	
501	XB4-5401-205		AR	SCREW,P,M4X12		

Prepared by

OFFICE IMAGING PRODUCTS QUALITY ASSURANCE CENTER

CANON INC.

Canon